IGNITION HOUSING, STATOR, CRANKSHAFT POSITION SENSOR

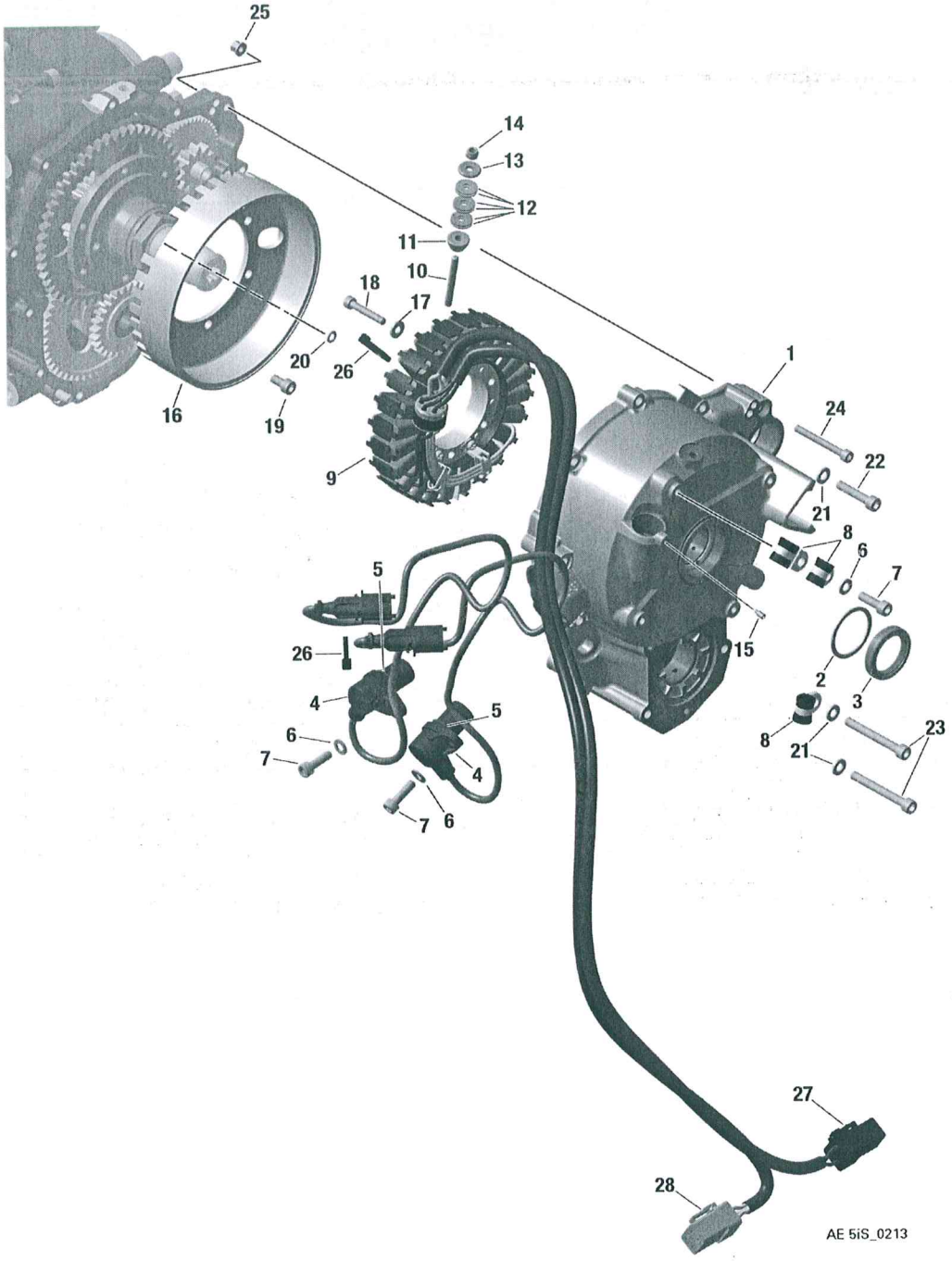

Figure 2.1: 24-20-00